myray
new comfort
in digital imaging

cefla
Making Your Life Better.

BU MEDICAL EQUIPMENT

SEDE LEGALE ED AMMINISTRATIVA
HEADQUARTERS
Cefla s.c.
Via Selice Provinciale, 23/a - 40026 Imola - BO (Italy)
tel. +39 0542 653111 - fax +39 0542 653344

STABILIMENTO PLANT
Via Bicocca, 14/c - 40026 Imola - BO (Italy)
tel. +39 0542 653441 - fax +39 0542 653555

CEFLA NORTH AMERICA
6125 Harris Technology Blvd. Charlotte, NC 28269 - U.S.A.
Toll Free: (+1) 800.416.3078 Fax: (+1) 704.631.4609

The images and technical specifications shown in this catalog are for indicative purposes only.
As part of ongoing technological updates, technical specifications may be subject to changes without prior notice.
In accordance with current regulations, in non-EU areas some products, as well as certain technical specifications, may have different availability and configurations.
We encourage you to always contact your local distributor for up-to-date technical specifications, availability and configurations.

MRXEGB251500 07/2026

RAY OF SOLUTIONS

RX DC
eXTend

EN

TOTAL CONTROL

Absolute positioning freedom and ultra-high definition intraoral imaging. RX DC - eXTend technology simplifies your work. Total, wireless control ensures fast installation and adaptation to all possible space requirements.

RX DC CONNECT (optional)
The RX DC X-ray unit can easily be connected to your PC via RX DC CONNECT. Via the USB port, you can log the X-ray exposure dose data in digital format.
With iRYS you can add the image to the patient's record and the relative X-ray log.
Monitor the dose value over time, display and export to other applications via shareable file.

MAXIMUM PRECISION
Focal spot 0.4 mm
and power 70 kV, 8 mA.

FAST INSTALLATION AND WIRELESS CONTROL
The efficiency of wireless technology with maximum simplicity of use.
The wireless controller frees users from the limits posed by on-machine control panels or wall-mounted controls.
It is equipped with a button for ultra-fast shooting (fraction of a second) and two simple settings which make it easy to select the most suitable X-ray acquisition programme.

PRECISION DIAGNOSIS

Maximum image quality, minimum dose for the patient.
RX DC - eXTend technology provides always-sharp images, a full configuration range and the exclusive flexibility of wireless technology.

The DC generator in the head tube is high-frequency and constant-potential. This technology gives sharp images with greater detail and lower exposure times than would be attainable with AC X-ray units, which are characterised by variable emissions. Moreover, constant-potential design ensures image generation is unaffected by power fluctuations. RX DC - eXTend technology is reliable for all diagnostic needs and always provides high-definition images by adapting to the sensor type.

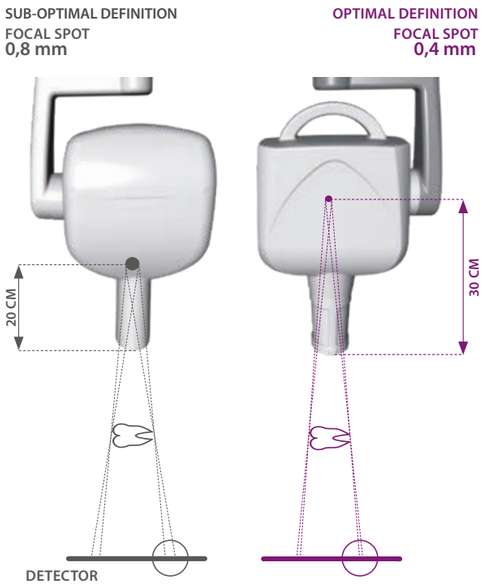

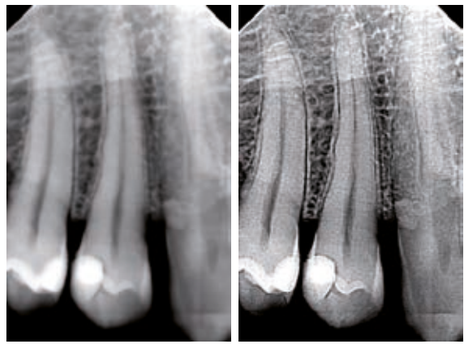

0,8 mm 0,4 mm

ALWAYS-SHARP IMAGES
The focal spot of just 0.4 mm is placed in the tube head in such a way as to obtain a source-to-skin gap of 30 cm (total bulk remaining equal). In this way RX DC - eXTend technology implements extensive internal collimation of the X-rays and gives an extremely small focal spot, producing ever-sharper images and ever-more precise detail.

MULTI-MODE

Automatic parameter modulation ensures the best exposure power/time selection: parameters are automatically determined on the basis of the patient's build and the specific region of investigation. With 28 selectable sensitivity levels, sharp images are guaranteed with any sensor.

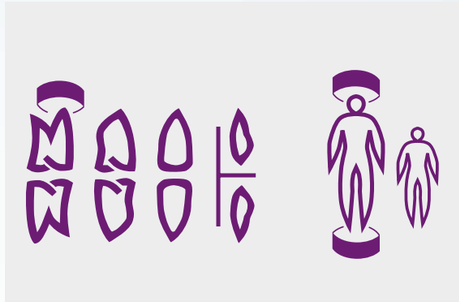

MINIMUM X-RAY DOSE

Attention to patient health is meticulous: a high frequency, constant potential generator minimises exposure times and reduces harmful radiation. Where deemed appropriate, the 4 mA mode halves the amount of X-rays. The interchangeable rectangular collimator cone (at 30 cm) further reduces the irradiated body surface area by adapting it to the effective surface area of the sensor.

SEQUENTIAL EXPOSURE

No downtimes as a result of tube overheating, not even when repeated use is required.
The fast dynamic duty cycle allows, in fact, sequential exposures by keeping tube temperature under constant control on the large hand-held unit display.

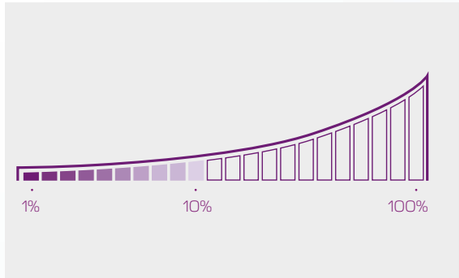

SIMPLE INSTALLATION, VERSATILITY, RELIABILITY

The solid arms are made of high quality materials that ensure strength and durability while reducing the risk of accidental vibration during acquisition. They are available in lengths of 40 cm, 60 cm and 90 cm and can be pointed in 6 directions to provide maximum adaptability and simplicity of installation.

TECHNICAL DATA	
Generator	Constant potential, microprocessor-controlled
Working frequency	145 - 230 KHz with self-adjustment (typically 175 KHz)
Focal spot	0.4 mm (IEC 336)
Total filtration	2 mm @ 60 kV / 2 mm @ 65 kV / 2 mm @ 70 kV (*)
Anode current	4 / 8 mA
Voltage at X-ray tube	60 / 65 / 70 kV (*)
Exposure times	0.020 – 1.000 seconds, R'10 and R'20 scale
Source-skin distance	20 and 30 cm
Irradiated field	Ø 60 mm and Ø 55 mm (with round cone)
Additional collimators	35 x 45 mm (with rectangular cone for size 2 sensors), 31 x 41 mm and 22 x 35 mm, for size 1 and size 0 sensors
Power supply	50/60 Hz, 115-120 V AC ±10% or 230-240 V AC ±10%
Duty Cycle	Continuous operation with self-adjustment up to 1s/80s total
Arms (for Standard version only)	Available in 3 lengths: 40 cm – 60 cm – 90 cm
Max. arm extension	230 cm, from wall
Versions	Standard (wall mounted) or Mobile (on portable cart)
Dose delivered	Viewing on a handheld device with option of digital archive on PC via iRYS software which can be automated via the "RX DC connect" (optional) accessory
PC connection cable	Serial with USB adapter available in various lengths
SOFTWARE	
Acquisition software (for PC)	iCapture for automatic saving of RX DC exposure parameters on PC
Image management software (for PC)	iRYS (compliant with ISDP®10003:2020 in accordance with EN ISO/IEC17065:2012 - certificate number 2019003109-3) and iPad iRYS viewer App (free)
Protocols supported in iRYS	ICOM 3.0, TWAIN, VDDS
DICOM Node Connectivity	iRYS - IHE compliant (Print; Storage Commitment, SR document; WorkList; MPPS; Query/Retrieve)
X-ray log	iRYS feature to associate exposure parameters with the X-ray images of each examination (exportable in PDF or CSV format)
REQUIREMENTS FOR ACQUISITION STATIONS / SECONDARY 2D PROCESSING STATIONS For more information on the hardware configuration, please refer to the "minimum and recommended system requirements" document	
Operating System	Windows 10 Pro 64 bit build v22H2 - Windows 11 Pro 64 bit build v24H2 (recommended)
Processor	Intel i3-12100 (3.3Ghz) 12th gen - Intel i3-14100 (3.5Ghz) 14th gen (recommended)
Hard Disk	256 GB SSD (or higher) - 512 GB SSD (recommended)
System Memory	16 GB (or higher) - 32 GB (recommended)
Video Card	Integrated
Monitor	Wide Monitor - 1344 x 768 pixels (or higher)

(*) values depend on the country where the product is marketed.

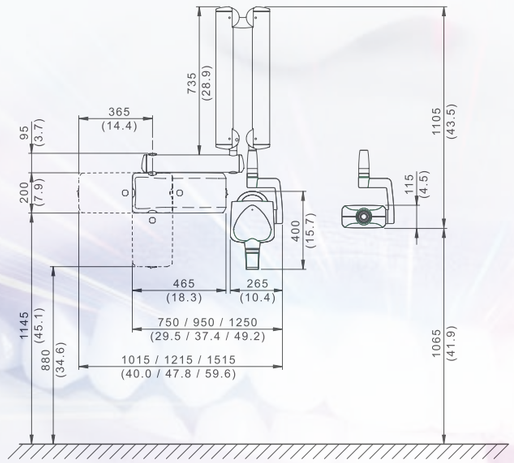

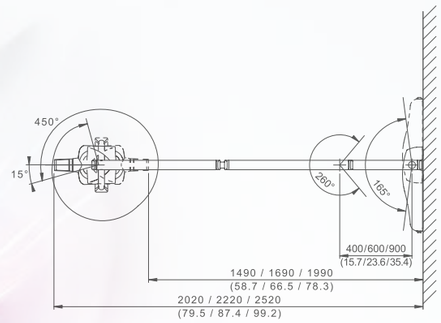

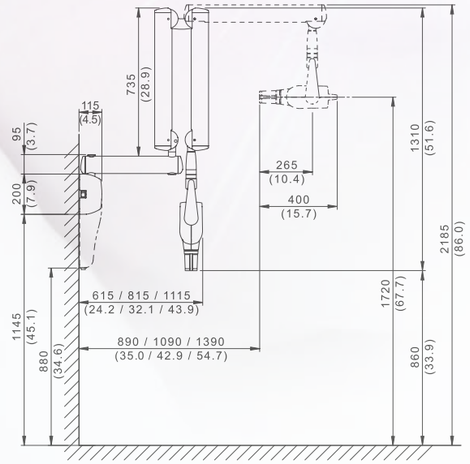

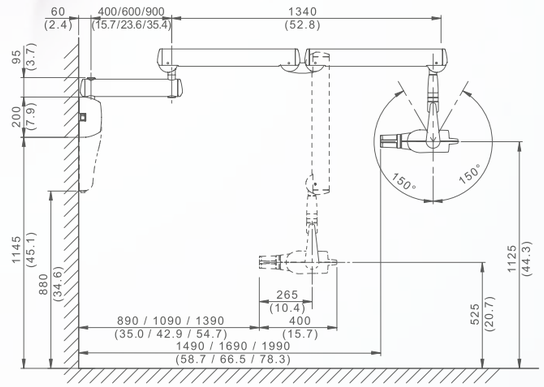

CE
0051